bw monitor

Just monitoring ballast water

Technical description

Version 5.1 (February 2020)

Ballast Water Monitoring A/S

Email: info@bw-monitor.com

CONTENTS

Background

"in-line and on time"

We saw a few years ago reputed monitoring companies marketing handheld testing devices for Ballast Water Management Systems (BWMS) and asked ourselves why on earth you would want to put more work on the ever smaller crew's plate. We thought an automated self-contained system was more in line with the reality of modern shipping and wanted to provide performance information on BWMS already on uptake, when it is useful rather than on discharge when it is too late to do something. Our two founding companies LITEHAUZ ApS and Medico Chemical Lab went on the journey together and now a unique monitoring device has been developed that can survey the functionality and biological efficacy of a BWMS automatically, continuously, directly in the ballast line and already on ballasting while your equipment is running. We like to think of this as 'in-line and on time'. The **bw-monitor™** is permanently installed and can continuously measure and transfer data on pre-treatment performance and on the disinfection unit's efficacy directly to our own secured servers for reporting to the BWMS maker's quality department, the shipowner's operational unit or a third party of your choice.

The **bw-monitor™** has been tested in the lab-scale and land-based full-scale facilities and it has been operational onboard a vessel for more than 15 months (Sept. 2017). The monitoring system can provide performance indications in both marine and fresh water, warm and cold water, and with all the typical disinfection techniques, such as electrolysis, chemical treatment and UV.

The **bw-monitor™** is designed with accompanying proprietary software. The software's built-in algorithm automatically adjusts monitor to the incoming water characteristics and analyses key water parameters by giving an instant BWMS status indication. The data collected by the system are encrypted and stored in the information management facility on-board the vessel until it can be sent to land via a satellite or mobile net connection of your choice and to the recipient(s) of your choice. We offer the **bw-monitor™** cloud storage facility for back up and/or subsequent analysis together with other data i.e. water temperature, salinity, vessel specific data, geoposition data and tidal information.

The monitoring system can also be accessed remotely for seamless software and algorithm updates.

Ballast Water Monitoring A/S is registered in Denmark, holds two patents on the technology and is 100% privately owned. Grants for innovation and industrial development from the Danish Maritime Fund, the Ministry of Industry and the Ministry of Environment in Denmark are gratefully acknowledged.

The bw-monitor™

The **bw-monitor™** analyses two key locations in the ballasting process and compares 'before' and 'after' levels. The positions are before any pre-treatment (i.e. typically a separation unit) and after the treatment unit. The two monitors' data are stored onboard. The bw-monitor™™ can be fitted with a communication line to a central onshore data repository, allowing for simple back up of data and for detailed analytical processes.

Shipowners may wish the performance data to be displayed to the crew during the ballast operation and in these cases simple traffic lights are displayed in the control room, while data are logged in a data storage device.

On the short term BWMS makers use the **bw-monitor™** as a voluntary self-monitoring device during the IMO "experience building phase" to stock information on their products.

Obviously, data can be provided to port state control as indicative sampling information, but this is not the primary intention of the system. A bw-monitor™ system can be adapted to in-line monitoring of deballasting. The actual piping arrangement on board governs the complexity of the installation.

The monitoring principle

The **bw-monitor™** utilizes two key performance parameters: particle density to assess filter retention, and the viability of microalgae as an indicator of disinfection performance. The parameters are measured with optical techniques, i.e. viable algae by fluorescence and particles by laser scattering. The response for each parameter may be logged in real time. i.e. in milliseconds. There are no removal or manipulation of samples nor any addition of chemicals.

Fluorescence

The use of active fluorescence to measure photosynthetic activity has been a generally accepted method for several years. Most of these methods use a flash stimulated fluorescence where it is possible to measure photosynthetic activity using variable fluorescence.

Variable fluorescence F_v is measured as the difference between a low level, steady state fluorescence F_o and the level of a fluorescent transient F_{max}. The difference between the two levels is a measure of the functionality of the PS II system of the algae.

The content of living phytoplankton is determined by calculating the variable fluorescence

$$F_v = (F_{max} - F_o).$$

The minimal fluorescence is determined by using a pulsating light source with preferably 20 ms to 100 ms intervals and a wavelength of 420 nm. To reach the state for determination of the minimal fluorescence

faster, a light source with a wavelength longer than 700 nm is used. The maximal fluorescence is determined by using continuous light source with a wavelength of 680 nm.

Laser Scattering

As the determination of the particle size and particle concentration is of great importance in the monitoring of the ballast water compliance, the apparatus is equipped with a light scattering unit. The light scattering unit is a pulsating laser module generating pulsating light with a wavelength of 650 nm. The laser light transmitted and the diffraction is measured at three angles.

The light scattering device is calibrated with priority to a reference particle size standard that allows determination of particle sizes in the range of 10–100 µm. The light scattering measurement is included in the continuously measuring cycle.

Timing

To measure the fluorescence and light scattering of a sample, the sample must initially be stimulated with light. The first interval is without light.

1. A dark period in which the sample is fed to the measuring position. In this period the sample is not exposed to light.

The light is emitted in 3 sequences:

2. A period of low light intensity, measuring the fluorescence from dead and living algae in the phytoplankton.

3. A period of intense light measuring the fluorescence from dead and living algae.

4. A period of light scattering measurements.

The fluorescence is measured by the photodiode and in combination with a preamplifier, a multiple feedback filter, a demodulator and an integration filter the electrical signal is transmitted to an ADC input on the main processor.

Thus, the measured parameters of phytoplankton and particles include F_o, F_{max} (and derived F_v, F_v:F_{max}) and light scattering values from three different positions.

The device and specifications

The **bw-monitor™** is designed as a two-legged device with the legs extending into the ballast pipe. One leg contains sources of light emission (both LED diodes and laser module) and the other measures the light scattering and holds LED diodes. Perpendicular to the light path, the fluorescence signal is detected in a silicon photodiode provided with a long pass filter. The laser light transmitted and the diffraction is measured at 0, 5 and 25 degree angles referred to as "center", "inner" and "outer", respectively.

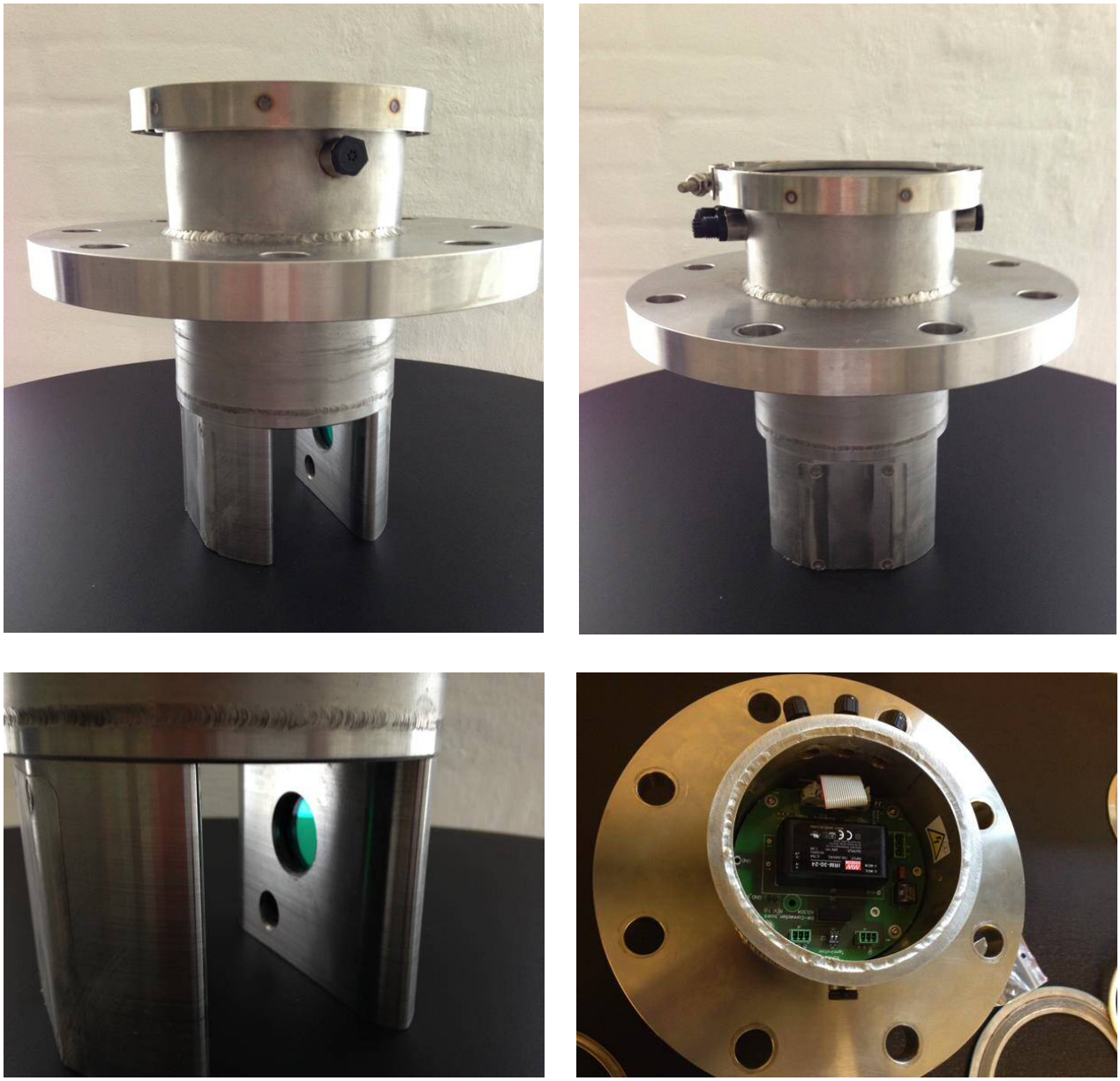

Figure 1. Pictures showing the design of the bw-monitor™

The ballast water is exposed for three sequences of UV light emissions and 1 sequence of laser scattering detection of particles. Based on the emission of fluorescence light from the algae in each sequence, the

amount of dead and living algae is calculated and based on the result of the laser scattering, measurement the amount of particles is determined.

The housing is available in stainless steel fitted with the necessary filters and glass. The power required is standard 230 V to a power supply provided as part of the monitoring system. Raw data and computed results are logged locally by the device and/or sent to a data repository and computational facility.

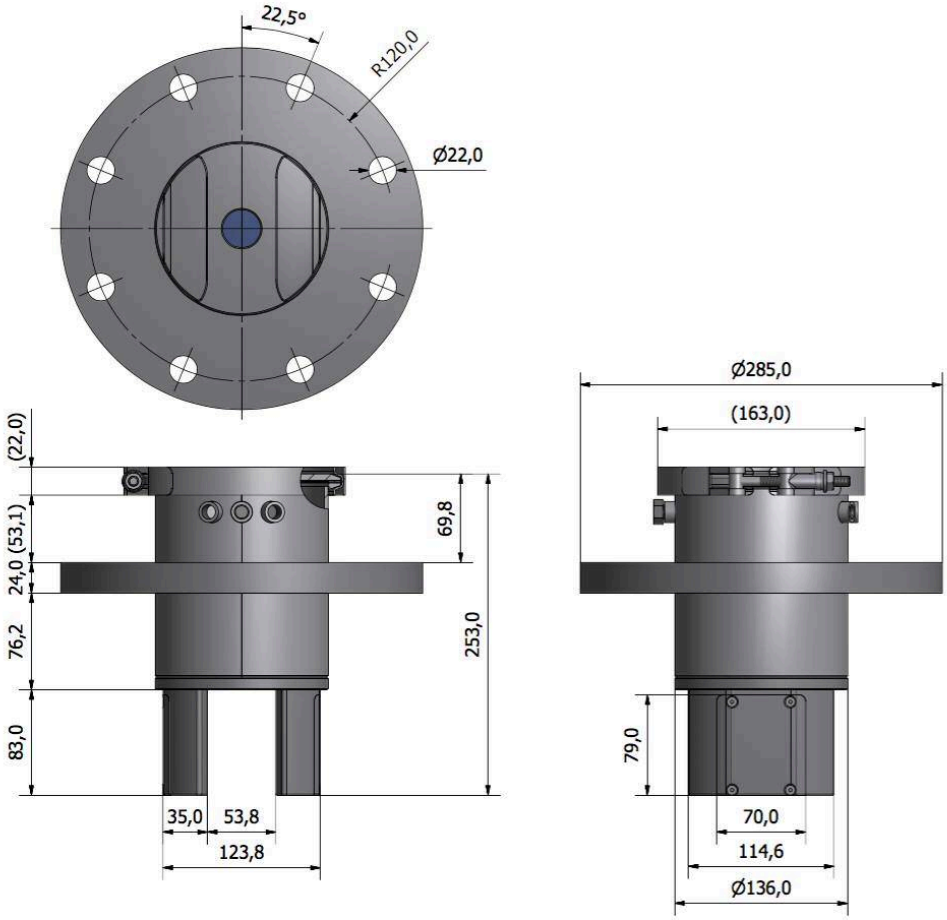

Figure 2. Device dimensions

bw-monitor™ – software description

A specially designed .NET-based application, which is installed on the PC connected to **bw-monitor™**, has been created in order to control, gather and analyze incoming data from **bw-monitor™**. The software has three modes, namely:

- Administration mode – gathering data from the device, executing the algorithm and local storage.

- User mode – user interface displays the information of the quality of the treatment.
    a. It is possible to select a **simple display** of an indicative fail/ok status for filter and treatment (according to previously assigned error values in the algorithm.
    b. It is also possible to present a **real time display** of data from the sensors as the data are collected.

Introduction

The following section presents how to use the **bw-monitor™** application in the User mode.

Starting the application

1. Go to the Bw-monitor™ folder.
2. Find "BWMonitor.exe" and double-click it.
3. Application initiation sequence (may take up to a couple of minutes).
4. When the application has started the below picture should be presented to the user.

Application's UI and features

In User mode a. Simple Display the main purpose of the application is to give an indicative presentation of the quality of the ballast water treatment process and log sensor data. The graphical presentation of data is based on summarised data sets.

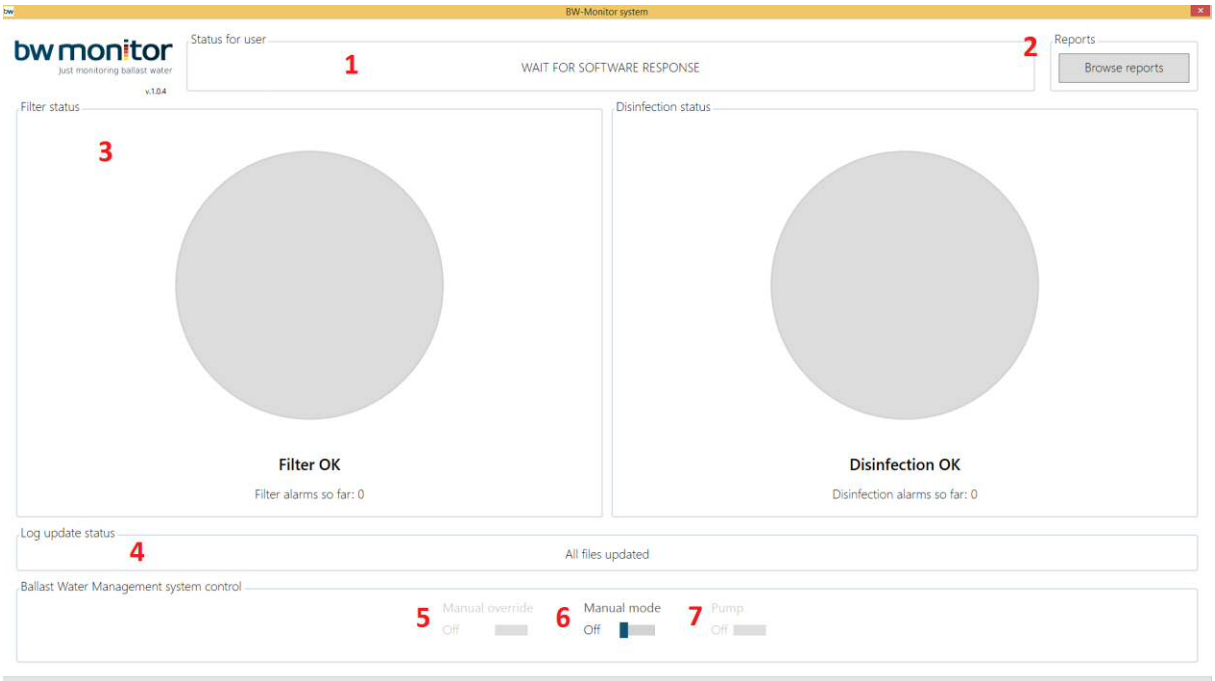

Figure 3. **bw-monitor™** desktop application UI

General:

1. Status for user – panel displaying current state of the application. What is happening in general, in which step of water treatment is the system at the moment.

2. Browse reports – button opens another window enabling to search and open desired reports on ballast water state.

3. Filter and disinfection status – circles indicate current water status on each monitor. They can show no response, no treatment, an alarm or report that readouts are out of limits of detection.

4. Log update status – application sends operation logs to the cloud each time there is an internet connection present. This panel shows current status of data being sent.

Ballast Water Management system control:

5. Manual override – toggle switch is enabled when all system is running. User may indicate that everything is fine despite of indicators from panels described at point 3 showing alarms. In such a way user points out some external error taking place at the moment.

6. Manual mode – in manual mode application stops listening to ship's pump signal and the system can be started by toggle switch described at point 7.

7. Pump – when the application operates in manual mode user may start or stop the system by the means of this toggle switch. Meaning that you can initialise logging without the BWMS being active.

A guide to the indicators

The software user interface is designed to intuitively communicate with the end user. It does not require any input, beside the start of application (an auto-start option is also available). The colourful dots navigate the user during operation and analysis, by giving easy notification of the current status of the treatment process.

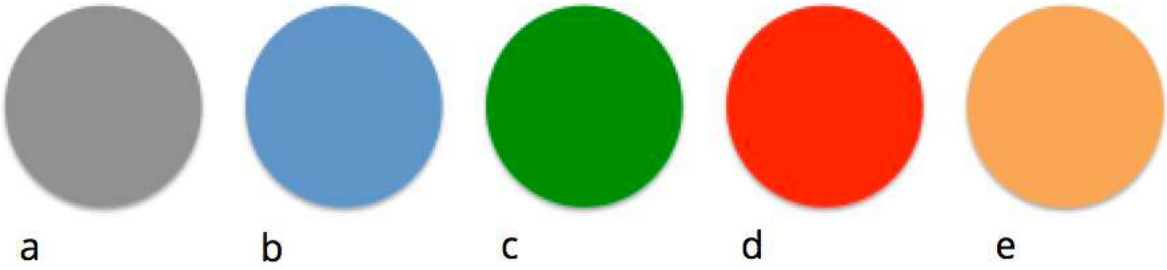

Figure 4. Software – indication lamps

The signs present in an illustrative way the current status:

a. Waiting for input from sensors

b. Water has very low phytoplankton content

c. Treatment status is OK

d. Alarm mode – treatment does not meet requirements

e. Cannot connect with sensors / service mode

In User mode b. Real Time Display the main purpose of the application is to present the continuous monitoring data as they are collected. The graphical presentation of data is based on the actual data sets with no alarms.

The application is started as described above. User mode b. appears as an option to choose in upper left corner. When the application has started and data are continuously loaded graphs will appear with the response from the sensors (Fv and scatter responses).

The Real Time Display is also used to provide a quick overview of cloud uploaded data in post operation evaluation of performance (see below).

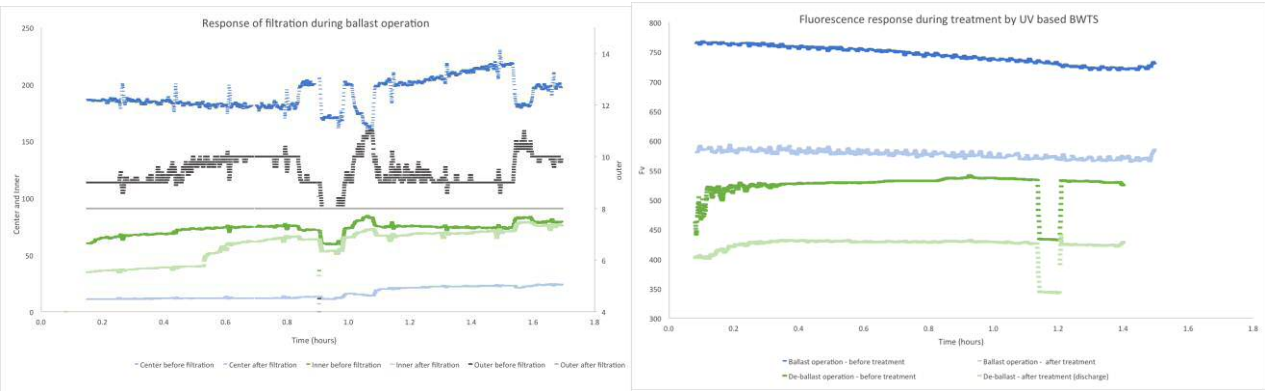

Figure 5. Real Time Display

Browsing file records

After each iteration of the algorithm (pump on / pump off) report and corresponding *.csv file containing specific data from each iteration of the algorithm are generated. When there is an internet connection the *.csv files shall be send to cloud storage. These files are also accessible locally on the PC:

1. Go to the Bw-monitor™ folder and find the sub-folder "CsvResults". In this folder you will find all of the recorded data, which are named after the installation's name and the time where the logging began.

2. Files are encrypted for security purposes. We have to run CsvDecryptor app in order to read them. You find it also in the software package in the folder "CsvDecryptor". In order to start decrypting, enter this folder and run "CsvDecryptor.exe" file.

3. Run CsvDecryptor app. In the window provide the path to the file we want to decrypt and the decryption key (this should be located in the main folder). Press Decrypt button.

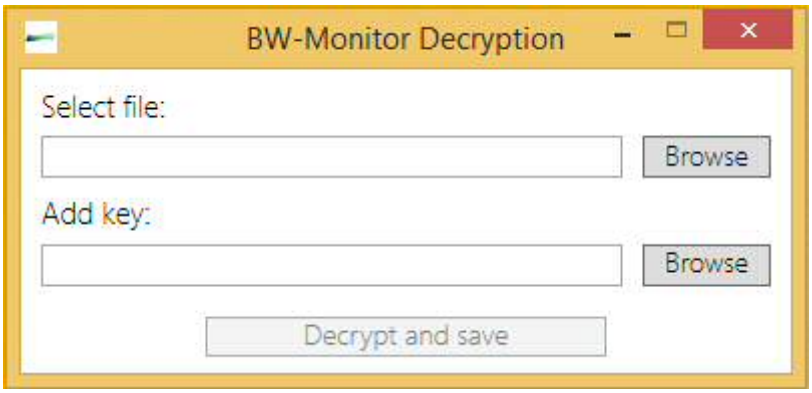

Figure 6. Application for decrypting water treatment file records

4. Choose the place where you want to save decrypted file.
5. You should see a message informing you about the success of the operation.
6. Now we can open the *.csv file with the tool of your choosing.

Algorithm

The algorithm has been designed to control the bw-monitor™ and to instantly analyze incoming data. The algorithm comprises a cascade step-wise check of the incoming values that will inform the end user whether:

- Treatment is necessary
- There is a problem with disinfection or filter unit

The main concept is depicted in the following figure:

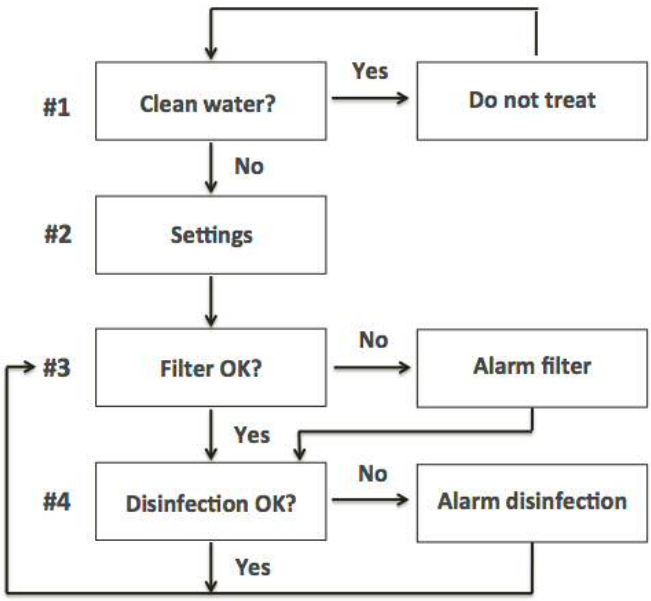

Figure 7. Algorithm concept

BWM Cloud description

Cloud system designed to be fully compatible with bw-monitor™ software. It has two main purposes:

- Database – cloud repository is a secure, encrypted server storage that collects all data from all devices.
- Algorithm update mode – the administrator can remotely update the algorithm with "push-updates". It removes the necessity of user interaction.

The cloud-based system is a central storage place of all data transferred from all users/devices. The collection of the data will enable pattern recognition and improvements of the algorithm for future software updates. All data that is stored on the BWM Cloud is encrypted.

Sampling, CFD, test data

Sampling

The bw-monitor™ samples at the following locations of a BWMS:

A. Before any manipulation by the BWMS of the ballast water, i.e. before a separation step and before any treatment.
B. After separation and treatment, before the water enters the BW tanks.

In a system without a separation step, the monitor is placed in the ballast line before the treatment section.

The **bw-monitor™** may be used to monitor de-ballasting as well, using the same monitors depending on the P&I of the vessel's BW system.

The ballast water flows by way of the ballast pump or gravity to the ballast tanks and through the monitor. During the entire duration of BWMS operation, the water is sampled from the two positions and the readings of particles and fluorescence 'before' and 'after' are compared.

The bw-monitor™ does not remove a side stream or sample volume *per se*, but monitors the volume of water between the two legs of the device as the water flows past the diodes.

Computational Fluid Dynamics

The water flows and conditions for monitoring water and particles suspended in the water has been modeled by computational fluid dynamics (CFD) isokinetic sampling (modeling by FS Dynamics, Gothenburg).

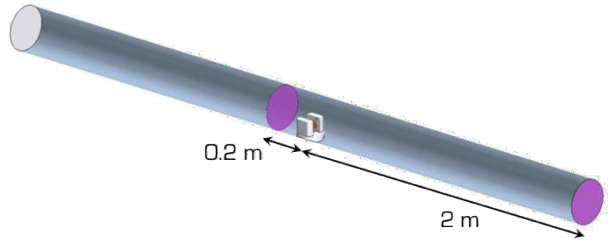

A

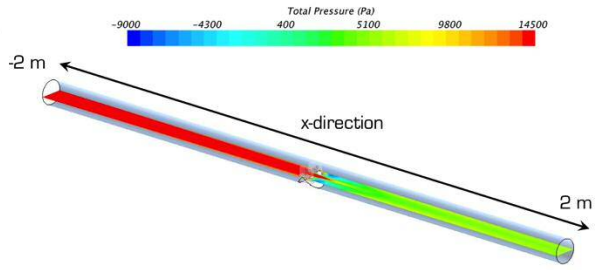

B

Figure 7. Test of pressure drop 250 m³/h in 150 mm and 250 mm diameter pipes.

A. Schematic drawing with monitor in place
B. Pressure profile in 150 mm diameter pipe
C. Pressure profile in 250 mm diameter pipe

Mass flow averaged pressure drop from -0.2 m to outlet:

B. – 8.4 kPa
C. – 0.2 kPa

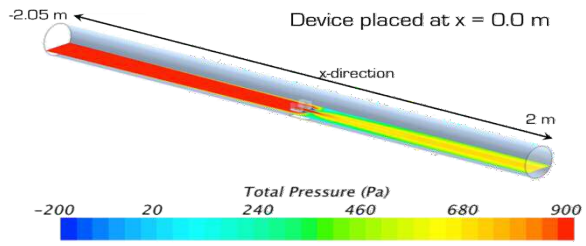

C

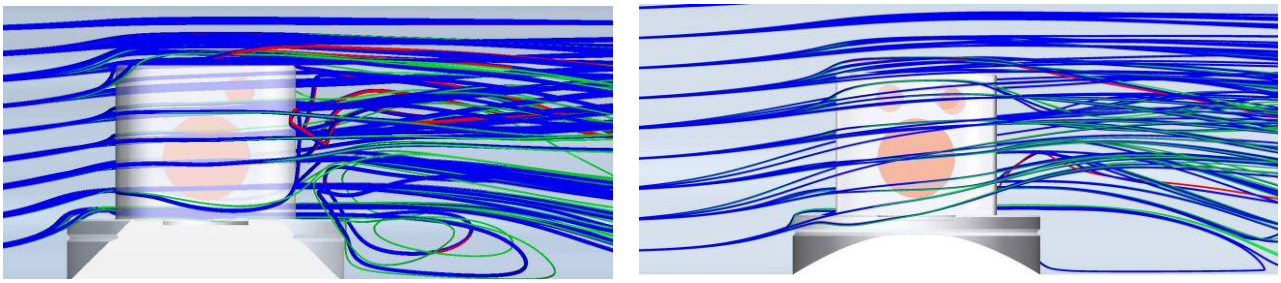

Figure 8. Particle trails in **150 mm** (left panel) and **250 mm** pipe (right panel)

Ref Particle: 15 µm, 0.998 g/cm³
Particle 1 : 15 µm, 1.1 g/cm³
Particle 2 : 150 µm, 1.7 g/cm³

It is assessed that **no significant** particle or algae concentration difference is expected from the ballast water as a whole, and the section of water monitored by the **bw-monitor™**. It is previously shown for sampling tubes in ballast water (pitot) that no interference with sampling representativeness is found for tubes down to < 1 inch (26 mm). The distance between the legs in bw-monitor™ is >2 inches (53.8 mm).

Due to the cross sectional area, the monitor induces a pressure drop when operating in the smallest pipe, i.e. the worst case scenario of the minimum size allowed (150mm pipe), where the pressure drops 8.4kPa. In a 250 mm diameter pipe the monitor the pressure drop is already of much reduced significance (0.2 kPa).

Test results - algae

The **bw-monitor™** provides an indicative result regarding the performance of the BWMS. It is not intended to provide data for direct assessment of D-2 compliance.

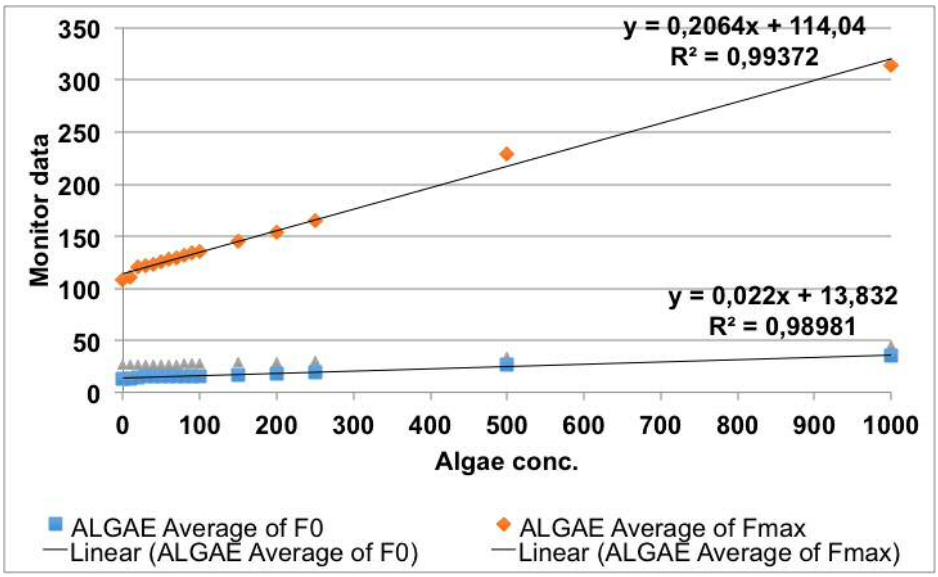

Figure 9. **bw-monitor™** response with variable algae concentration.

The test with different algae concentrations gives a nearly perfect response with **bw-monitor™**. Each point on the graph represents 20 averaged sampling points. The standard deviation of the group of measurements is +/- 1.5. The tests are performed with mono-cultured algae.

Test results - particles

A biphasic chemometric algorithm using data from the three laser scattering photo diodes is used for the particle concentration interval 0-150 mg/L (tested with A2 and G200 particles).

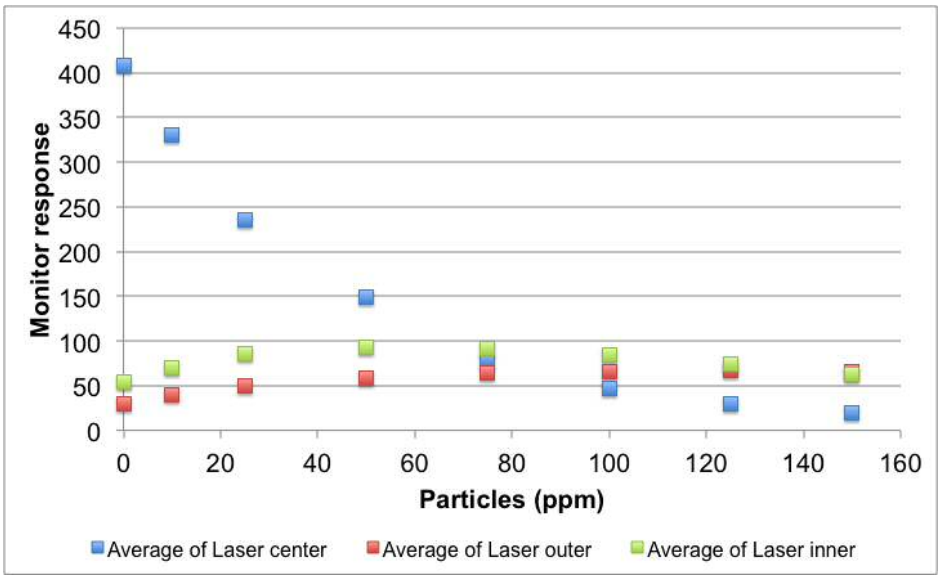

Figure 10. **bw-monitor™** response with variable particle concentration (G200 particle type)

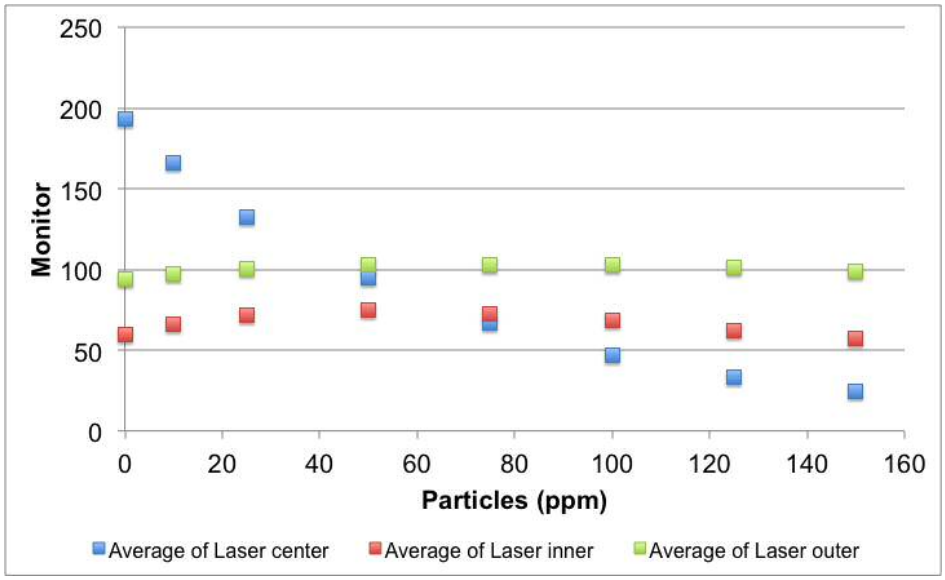

Figure 11. **bw-monitor™** response with variable particle concentration (A2 dust particle type)

The test with different particles types and their different concentrations gives predicted result where the signal of the scattering for center is decreasing as particles block the direct light. In both the inner and outer the light intensity is increasing as more particles scatter more light and then decreasing as the shadow effect takes place. Each point on the graph represents 20 averaged sampling points. The standard deviation of each group of measurement is low: +/- 0.5 for A2 and 0.8 for G200 particles, respectively.

Test results – algae and particles combined

In the graphs below, only data from the direct laser scattering photo diodes is shown, each representing a fixed A2 particle concentration in the interval 10-75 mg/L (tested with A2, A4 and NSI particles) with a minor influence from the increasing algae concentration. The viability of algae is estimated with a linear progression and calibrated with chlorophyll a, and known densities of algae (species *Pseudokirschneriella subcapitata*).

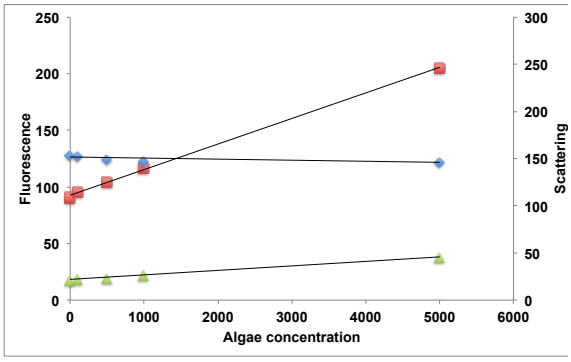

75 ppm A2 dust with variable algae concentrations (mL^{-1})

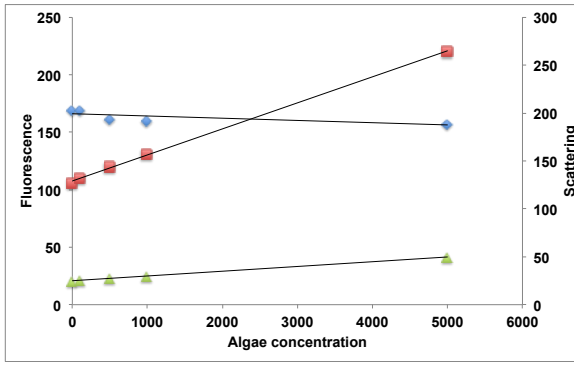

50 ppm A2 dust with variable algae concentrations (mL^{-1})

Fmax
F0
Scattering

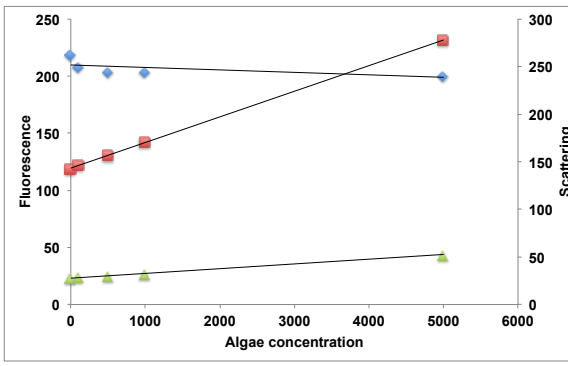

25 ppm A2 dust with variable algae concentrations (mL^{-1})

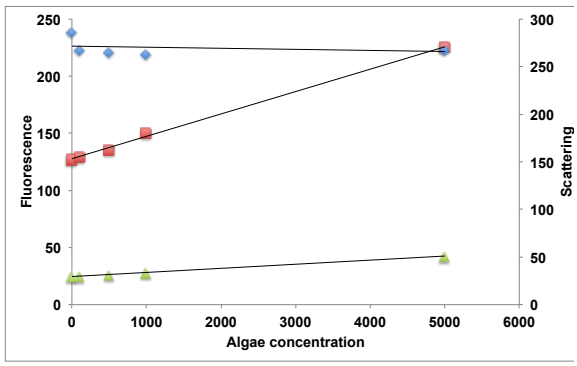

10 ppm A2 dust with variable algae concentrations (mL^{-1})

Figure 12. **bw-monitor™** response with four particle densities in variable algae concentrations

The current design allows for laser diffraction-based detection of approx. 10 mg/L particle density using only the center diode. The chemometrics are under development to utilise the data from all three diodes and detection may be improved with further data.

The fluorescence detector determines approx. 10 algae/mL as the lowest number currently possible (see below). In waters with strong absorption properties this will be raised, although the **bw-monitor™** does allow for matrix dependent emission profiles.

The **bw-monitor™** is useful as an indicative sampling device and may be compared to other devices. The fluorescence signal of **bw-monitor™** can be converted to a concentration of chlorophyll, which is a measure of algae or phytoplankton, and therefore related to the D-2 criteria of 10 organisms/mL for 10-50 um organisms. However, the devices do not report D-2 compliance and we urge caution here for several reasons:

First of all, all commercial devices, including **bw-monitor™**, measure chlorophyll response as an indication and there are other organisms in this size range that does not have chlorophyll;

Secondly, algae come in different sizes and hold different chlorophyll concentrations. The conversion factor used is therefore crucial;

Thirdly, water chemistry will influence the values detected.

In our generic setup for **bw-monitor™** we have chosen not to convert Fv readings to numbers of algae and currently not be included as an D-2 indicative sampling device, but rather be installed as a voluntary performance monitoring device.

Installation

The **bw-monitor™** is designed for installation inside the ballast line in two locations (one monitor in each). The monitor fits into a 150 mm (6") side arm that can be welded onto the ballast pipe and fitted with a DIN standard flange, and blinded off in advance of the actual installation. The bw-monitor™ will be fitted with a similar flange for the DIN standard pipe and is installed on board. The bw-monitor™ does not require a separate pump. A detailed Installation Manual will be provided in preparation of installation.

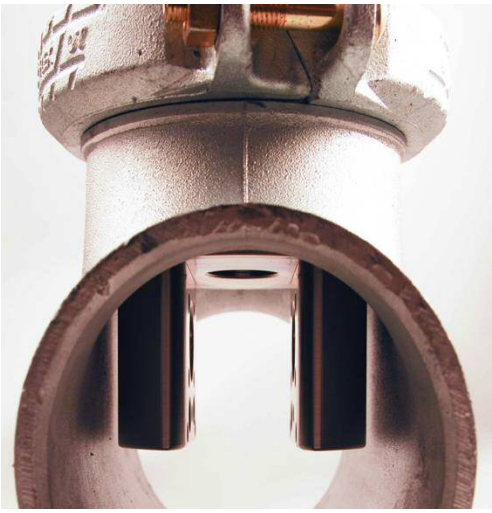

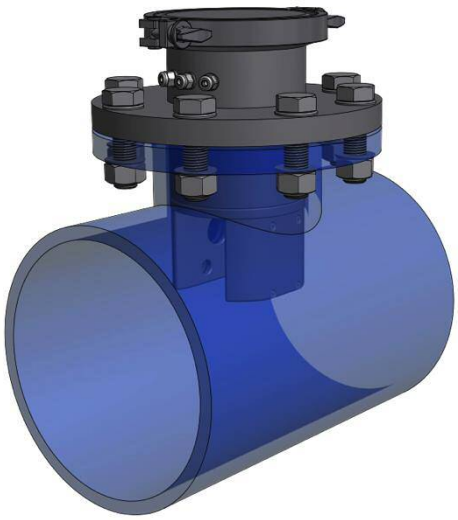

Figure 13. Installation of the bw-monitor™ in a 150 mm pipe (left panel) and in a 250 mm pipe (right panel)

The bw-monitor™ is powered and controlled from a cabinet with power supply etc. The software and internet communication is installed on a PC with a display for user interface. The monitor can be manually started or will start automatically when ballasting is initiated when appropriately connected.

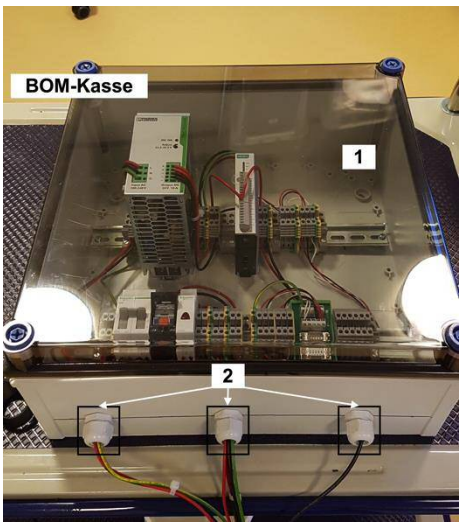

The PC and display (not shown) is place in control room or bridge.

If required, the PLC of the BWMS can be used for controlling and storage.

Figure 14. Electric cabinet (shown with see through front). Is delivered in stainless steel.

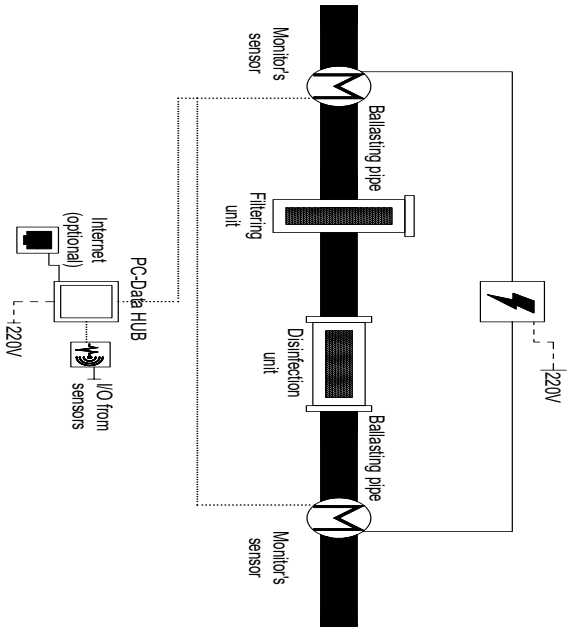

Figure 15. Schematic installation of the bw-monitor™ sensors

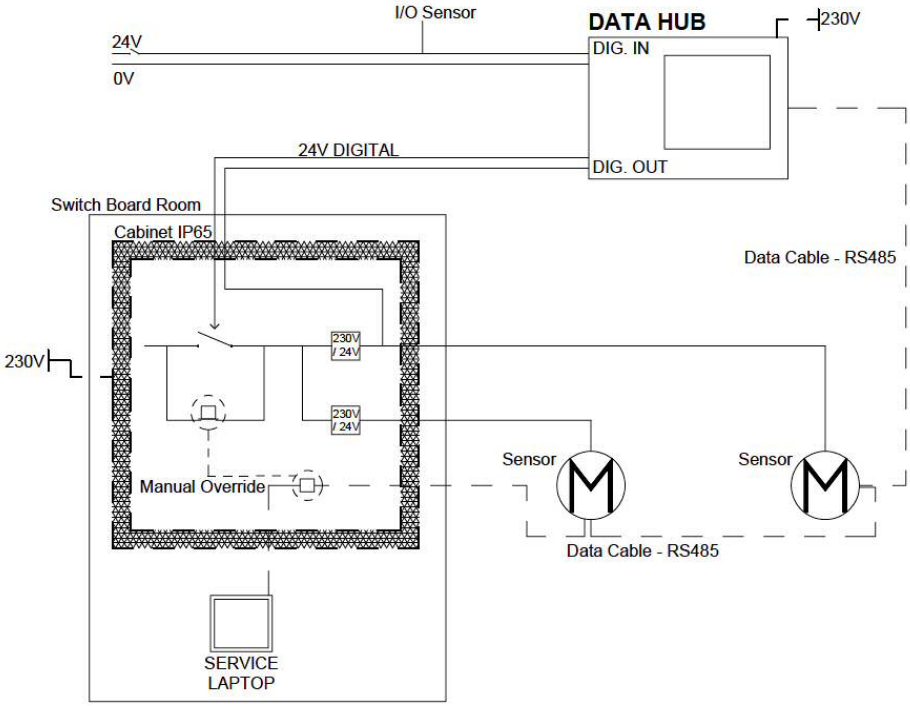

Figure 16. Wiring plan for the bw-monitor™ system

Cleaning and Maintenance

In order to ensure the **bw-monitor™** does deliver trustworthy results it is required to clean the equipment and remove biofouling or other deposits (Please refer to "Cleaning and Maintenance Guidance for bw-monitor™").

Cleaning and maintenance should be carried out every **3-6** month depending on position and exposure conditions of the **bw-monitor™**. Maintenance work should only be undertaken by staff, which has been provided with sufficient information and instruction. A **bw-monitor™** cleaning kit is provided with the monitor.

Appendices

1. **Diagram over bw-monitor™**
2. **Specifications**
3. **Spare parts**

1. Diagram over bw-monitor™

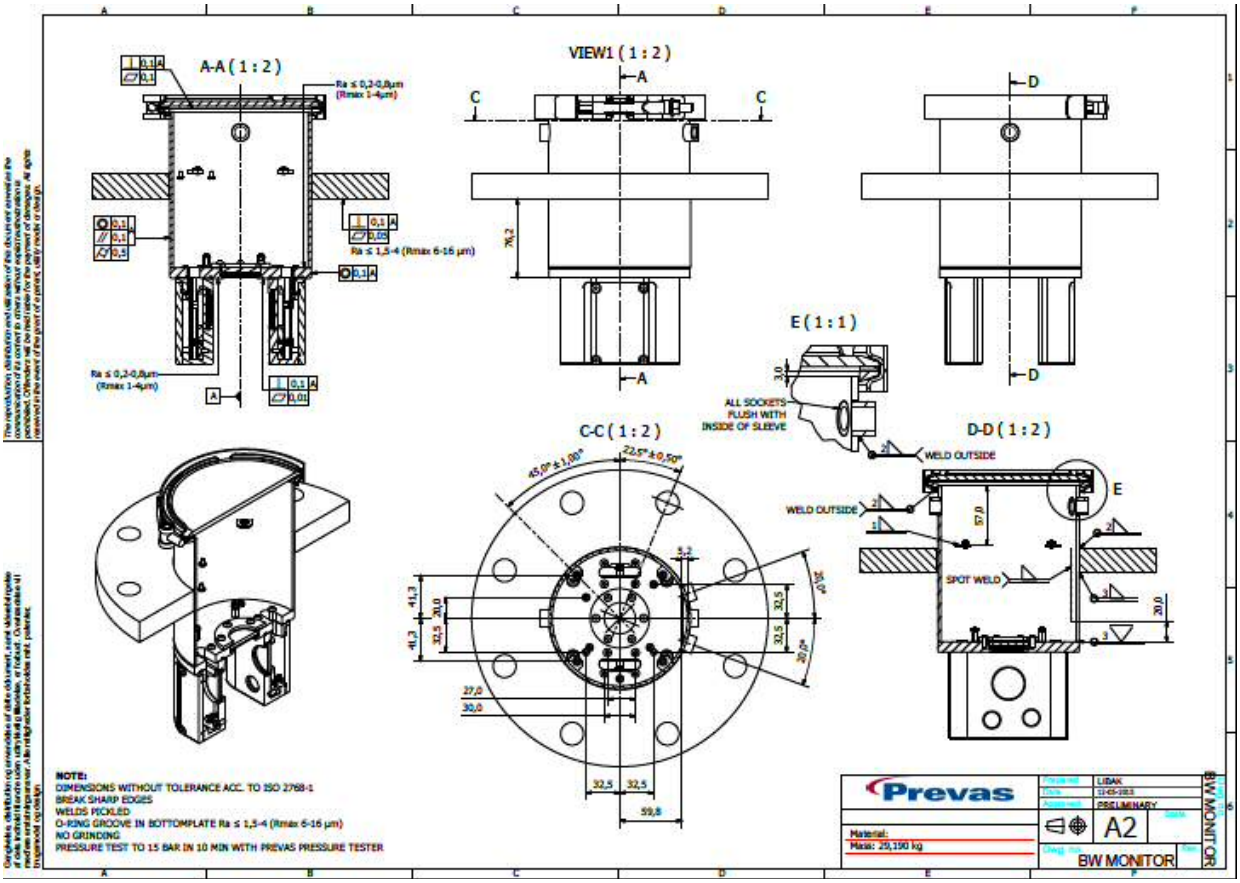

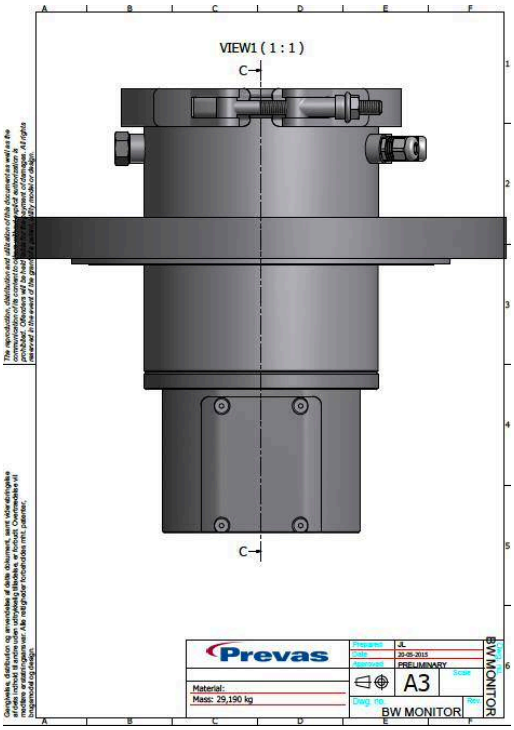

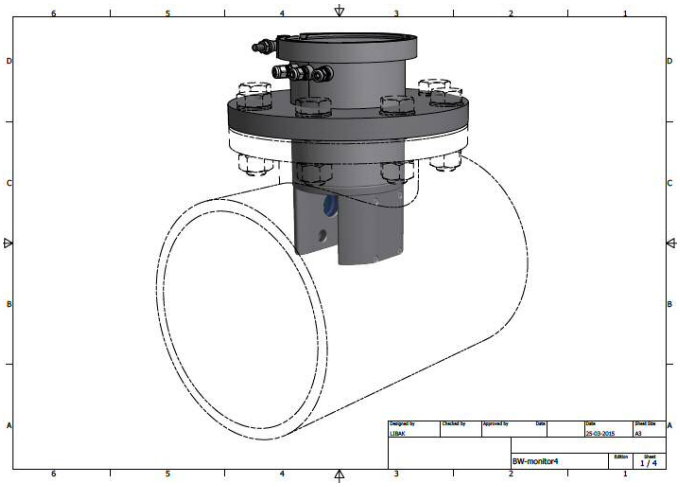

2. Specifications

Sensor	
Size	Approx. 150 mm Ø x 350 mm L (hereof 90 mm inside ballast pipe)
Weight	22 kg (stainless steel)
Required headspace from ballast water pipe	250 mm
Straight pipe length at sensor position	1 m (preferably 2 m) before and preferably 0.5 m after
Position and angle of sensor	Can be positioned on pipes running vertically or horizontally. If horizontally, an angle of 45 degrees is optimal (range 30-60).
Installation	DN 150 side flanges
Sensor input	85 VAC to 264 VAC
Power supply	
Voltage and power consumption	230 VAC and <50W
Frequency range	49-65 Hz
Data analysis and storage	
Controller (PC)	PC supplied
General (Pre-tests; Full environmental test pending)	
Temperature	0-65 °C
Pressure	PN6 (tested to PN10)
EMC	Acceptable

3 Spare parts

The sensors of bw-monitor™ are not repairable locally.

The following parts are available at GPV A/S.

GPV varenr.	Betegnelse
BL00026R	EXITATION UV FILTER 4.3MM ROHS
BL00008R 01	SENSOR HOUSING DIODE SIDE ROHS
BL00015R 01	SENSOR HOUSING LASER SIDE ROHS
BL00027R	EMISSION FILTER 5.3MM ROHS
BL00009R 02	BOTTOM PLATE ROHS
BL00012R 01	MOD FLANGE DN150 PN10 ROHS
BL00024R 01	LID PLATE ROHS
BL00018R	ISO 7483 SPIRAL WOUND GASKET ROHS
BL00013R 02	SLEEVE ROHS
BL00010R 01	RETAINING PLATE 3 HOLES ROHS
BL00016R 01	RETAINING PLATE 2 HOLES ROHS
BL00011R 01	LASER GLASS ROHS
BL00048R	SCREW HEXAGON M22 X 80 ROHS
BL00032R 01	LID FOR HOUSING ROHS
BL00019R 01	CONNECTION BOARD BRACKET ROHS
BL00017R 01	RET RING BOTTOM GLASS ROHS
BL00047R	PLAIN WASHER M22 ROHS
BL00031R 01	FLANGE FOR V-CLAMP ROHS
BL00033R	V-CLAMP Ø156 ROHS
BL00036R	SHOULDER SCREW M3x12 ROHS
BL00049R	NUT HEXAGON M22 ROHS
BL00014R	M16 x 1.5 - CABLE GLAND ROHS
BL00038R	PARALLEL PIN M4X8 ROHS
BL00042R 01	HALF SOCKET M16 X 1.5 ROHS
BL00030R	O-RING Ø2X72 FKM80 ROHS
BL00034R 01	NITRIL RUBBER GASKET FOR V-CLAMP ROHS
BL00035R	STANDOFF M3 X 10 ROHS
BL00028R 01	CABLE CLAMP PLATE ROHS
BL00046R	CABLE GLAND M 20 x 1.5 ROHS
BL00043R 01	HALF SOCKET M20 X 1.5 ROHS

GPV varenr.	Betegnelse
BL00044R 01	HALF SOCKET M12 X 1.5 ROHS
BL00041R	M4 ROUND METRIC SPACER ROHS
BL00057R	BREATHER VENT 7066K131 ROHS
BL00021R 01	WASHER GASKET 1A ROHS
BL00020R 01	WASHER GASKET 2A ROHS
BL00055R	SCREW HEXAGON M3 X 6 ROHS
BL00023R 01	WASHER GASKET 1B ROHS
BL00025R 01	WASHER GASKET 2B ROHS
BL00037R 01	SELF ADHESIVE FOAM INSERT ROHS
BL00029R	FC RIBBON CABLE CLAMP ROHS
BL00059R	SCREW HEXAGON M4 X 16 ROHS
BL00058R	SCREW TORX M4 X 8 ROHS
BL00050R	SCREW CYLINDER HEAD M4 X 8 ROHS
BL00051R	SCREW HEXAGON M6 X 16 ROHS
BL00040R	SCREW UNBRACO M4X10 A4 ROHS
BL00054R	PLAIN WASHER M3 ROHS
BL00053R	PLAIN WASHER ST4 M4 ROHS
070195000R	LABEL HIGH VOLT - WARNING

Service contact

Contact	Number
Ballast Water Monitoring A/S, Denmark	+45 88 70 86 75
GPV, Denmark (orders for spares)	+45 72 19 14 00